Round 2

SHOTLINK

Manitoba Open

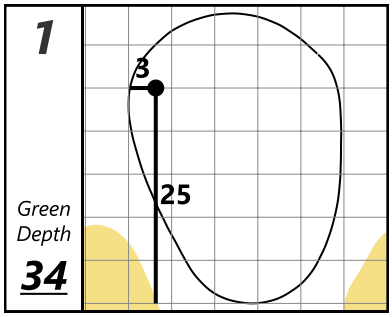

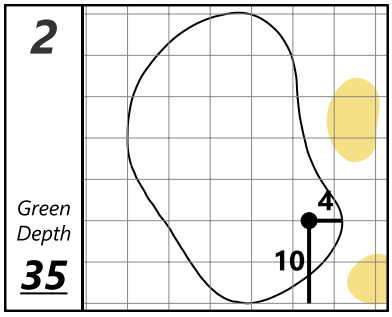

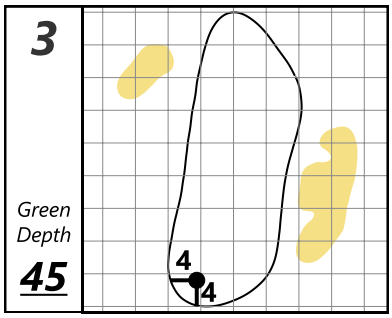

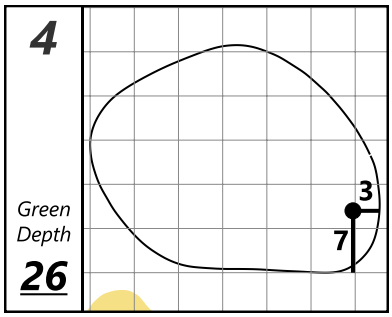

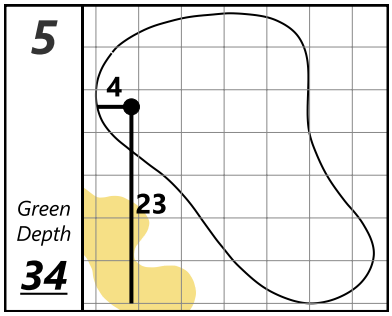

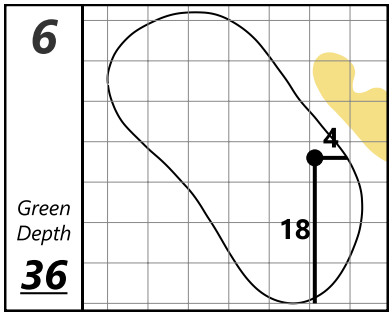

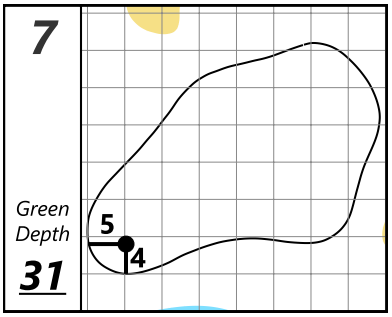

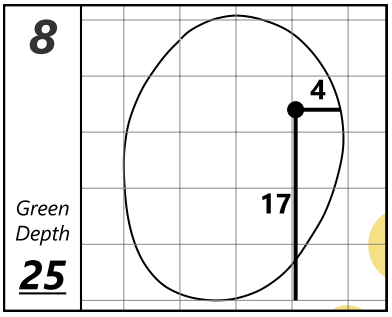

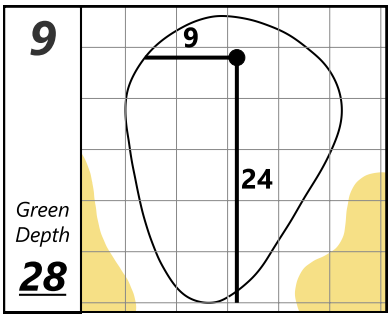

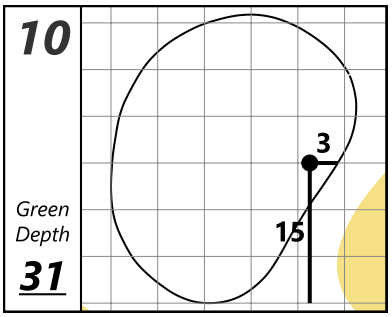

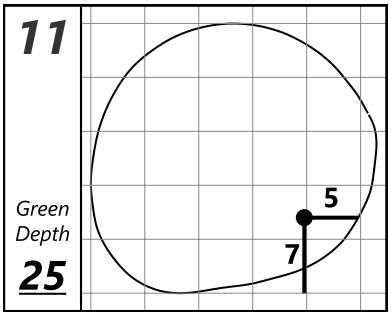

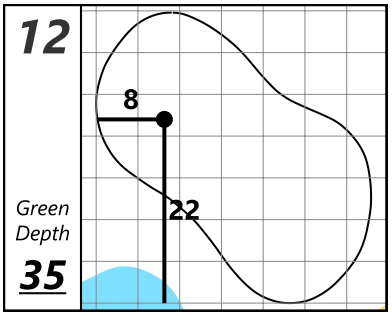

Breezy Bend Country Club

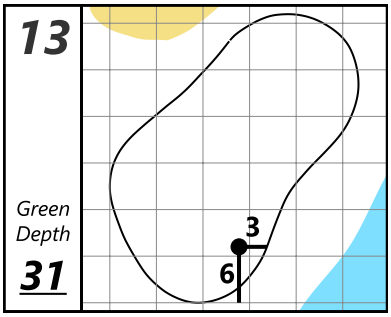

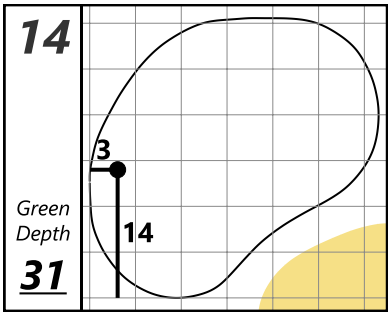

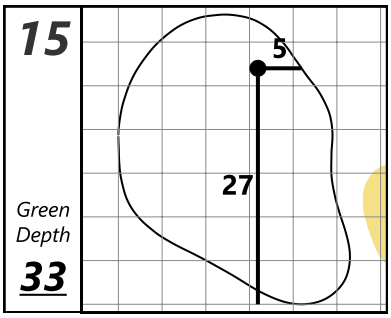

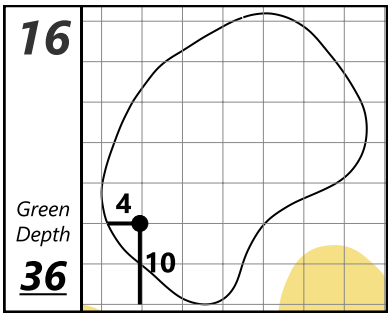

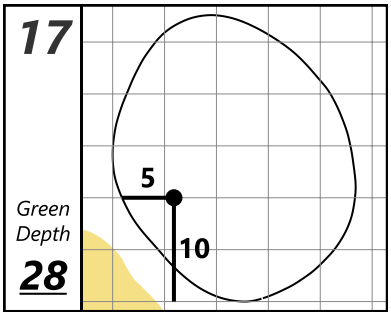

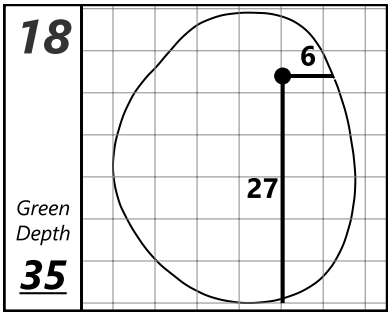

Each side of a complete square on the green represents 5 YARDS

Saturday, August 23, 2025 2:20 PM